2018-24 Chevy Equinox
Mud Flap Set, Front
Mounting Diagram & Instructions
Kit# GCR26F
766810/766759

IMPORTANT:
Manufacturer is not responsible for negligent use of vehicle with mud flaps installed, including over-tightening of screws and bolts causing damage to vehicle or mud flaps.

TOOLS REQUIRED-

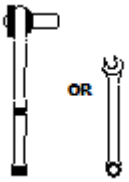

5/16" Open Wrench or Socket Wrench

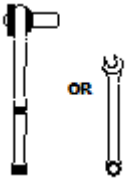

¼" Open Wrench or Socket Wrench

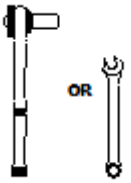

3/8" Open Wrench or Socket Wrench

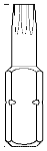
T15 Torx Bit

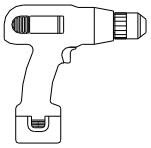
Electric or Rechargeable Drill

¼" Drill Bit

FLAPS

(1)Flap Assembly, Front, DS

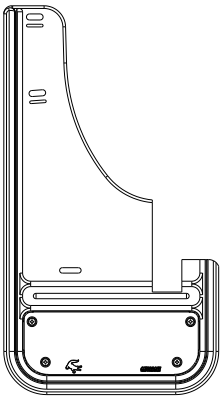

(1) Flap Assembly Front, PS

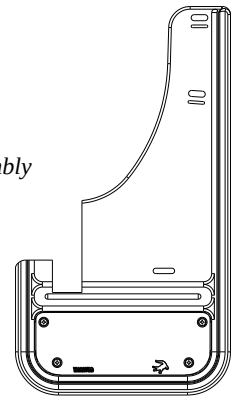

PARTS BAG # 766764

a) *(4) Washer, Flat 0.203" x 1.5", 18GA, SS Part #018066*

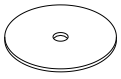

b) *(4) Washer, Flat,SS 0.203"ID x 1"OD, 18ga Part #018081*



c) *(2) Washer, Flat, SS 0.203"ID x 0.781"OD, 20ga Part #018018*



d) *(2) Screw, Mach. 18-8SS,10-24x1,Hex Hd Part # 012022*



e) *(2) Nut, Hex #10-24, SS Part # 025003*

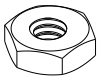

f) *(2) Washer, Lock 18-8SS, Helicoil Part #024001*



g) *(6) Bolt, Hex Nut, SS M4.2 x 1" Black Part #016041*

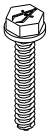

h) *(2) Clip, Fender Driver's Side Part #766839*

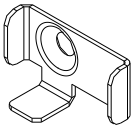

i) *(2) Clip, Fender Passenger Side Part #766840*

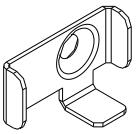

INSTALLATION *(For ease of installation it is suggested that the wheel be removed)*

1. Before you install your Mud Flap Set, see the diagram and parts list for all necessary parts. Start on the driver's side.

2. Remove the factory screw from the inner wheel well.

3. Install 2 clips included with kit into the holes #1 & #2 located at the upper part of the mud flap. When installing these clips, ensure that the lower part of the clip is placed into the lower cutout.

1520 - 33 St N · Lethbridge, AB T1H 5H3 · Canada
Toll free: 1-800-661-8208 · Email: info@truckhardware.ca · www.truckhardware.ca

4. Loosely secure the clip on hole #1 using a small flat washer (#018018) and a hex bolt (#016041), and the clip on hole #2 using a large flat washer (#018066) and a hex bolt (#016041).
5. Install mud flap through hole #3 to fender hole #5 using a large flat washer (#018066) and a hex bolt (#016041).
6. Ensure that the inner most part of the flap is tucked behind the liner as shown in Diagram B.
7. Cut liner to allow flap to sit flush against the back of the liner as shown in Diagram C.
8. Insert clips on holes #1 and #2 into the fender lip and tighten the screws to secure the clips.
9. Using a bubble level or square, ensure that the mud flap is level. Viewing the vehicle from the back, the outer edge of the mud flap should appear parallel to the tires.
10. Drill a ¼" hole through mud flap and fender liner to create hole #4 and hole #6.
11. Install one machine screw (012022), and one flat washer (#018081) through hole #4 into hole #6 and secure with one flat washer (018031), one lock washer (024001) and one hex nut (025003).
12. Carefully tighten all fasteners and ensure that the flap has remained level.
13. Repeat procedure for the passenger side.

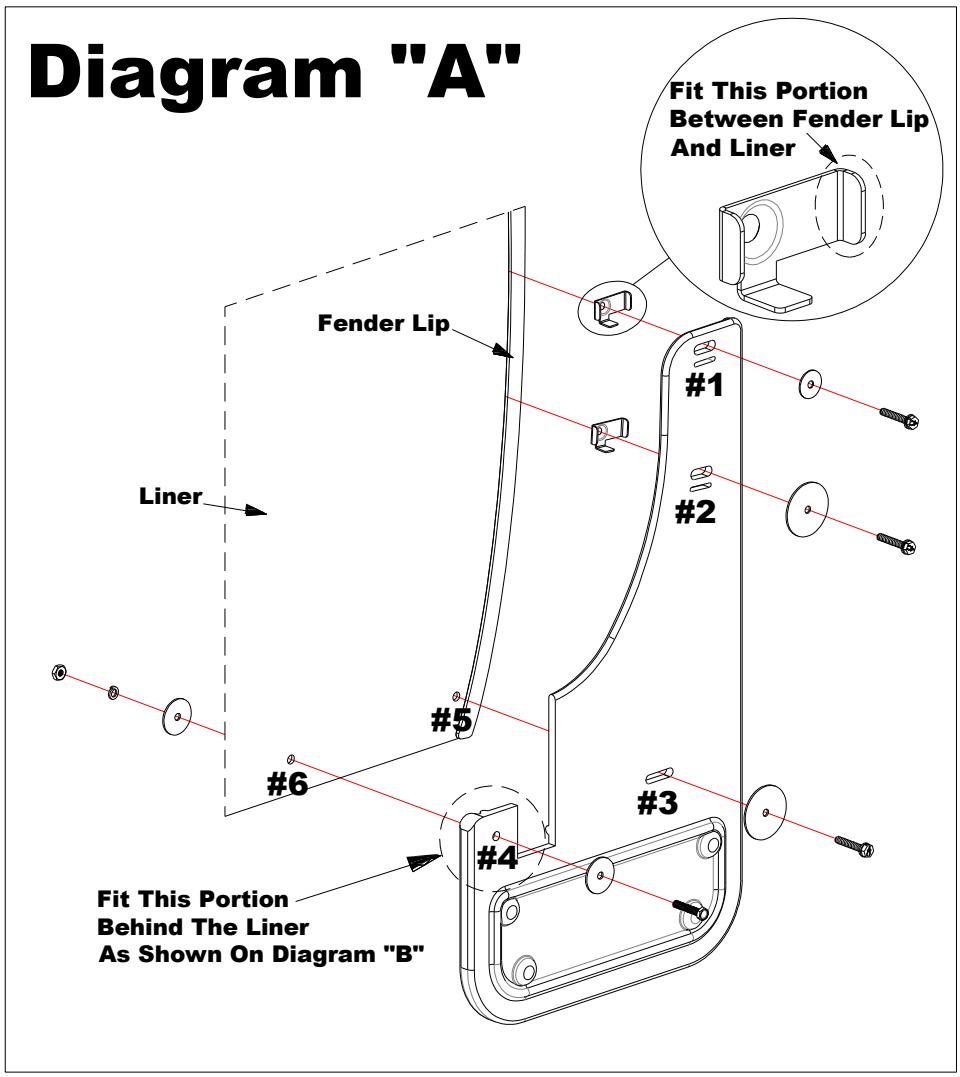

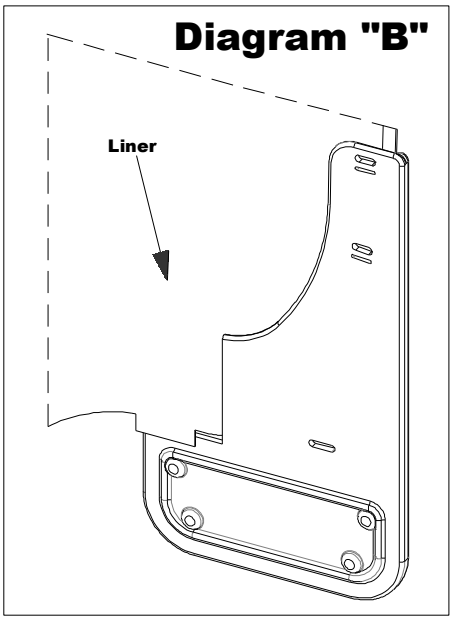

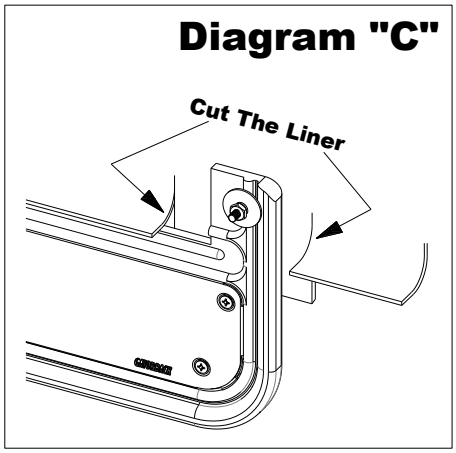

Please check out our YouTube channel to see an install video for this application. YouTube

2018-C Chevy Equinox
Mud Flap Set, Rear
Mounting Diagram & Instructions
Kit# GCR26R
766818/766765

IMPORTANT:
Manufacturer is not responsible for negligent use of vehicle with mud flaps installed, including over-tightening of screws and bolts causing damage to vehicle or mud flaps.

TOOLS REQUIRED-

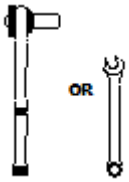

5/16" Open Wrench or Socket Wrench

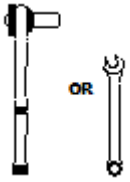

3/8" Open Wrench or Socket Wrench

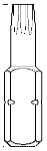

T15 Torx Bit

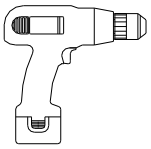

Electric or Rechargeable Drill

¼" Drill Bit

FLAPS

(1)Flap Assembly, Front, DS

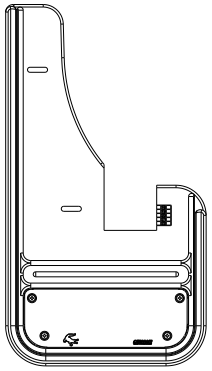

(1) Flap Assembly Front, PS

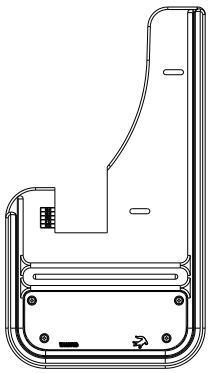

PARTS BAG # 766770

a) *(4) Washer, Flat 0.203" x 1.5", 18GA, SS Part #018066*

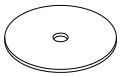

b) *(4) Washer, Flat,SS 0.203"ID x 1"OD, 18ga Part #018081*



c) *(4) Bolt, Hex Nut, SS M4.2 x 1" Black Part #016041*

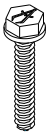

d) *(2) Screw, Mach. 18-8SS,10-24x1,Hex Hd Part # 012022*



e) *(2) Nut, Hex #10-24, SS Part # 025003*

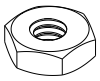

f) *(2) Washer, Lock 18-8SS, Helicoil Part #024001*

INSTALLATION *(For ease of installation it is suggested that the wheel be removed)*

2. Before you install your Mud Flap Set, see the diagram and parts list for all necessary parts. Start on the driver's side.

2. Remove the 2 factory screw from the inner wheel well on holes #4 & #5.

3. Position the flap so that the inner most part of the mud flap sits behind the liner as shown in Diagram B.

4. Mark the liner on either side of the mud flap.

5. Set the flap aside and cut the liner on the marks as shown in Diagram C.
6. Ensure that the inner most part of the flap is tucked behind the liner as shown in Diagram B.
7. Loosely install mud flap through holes #1 & #2 into factory holes #4 & #5 and secure with a hex bolt (016041) and a 1-1/2" flat washer (018066)
8. With a square of other levelling tool, ensure that the mud flap is level.
9. Tighten all fasteners.
10. Drill a ¼" hole through mud flap and fender liner to create hole #3 and hole #6.
11. Install one machine screw (012022), and one flat washer (#018081) through hole #3 into hole #6 and secure with one flat washer (018031), one lock washer (024001) and one hex nut (025003).
12. Carefully tighten all fasteners and ensure that the flap has remained level.
13. Repeat procedure for the passenger side.

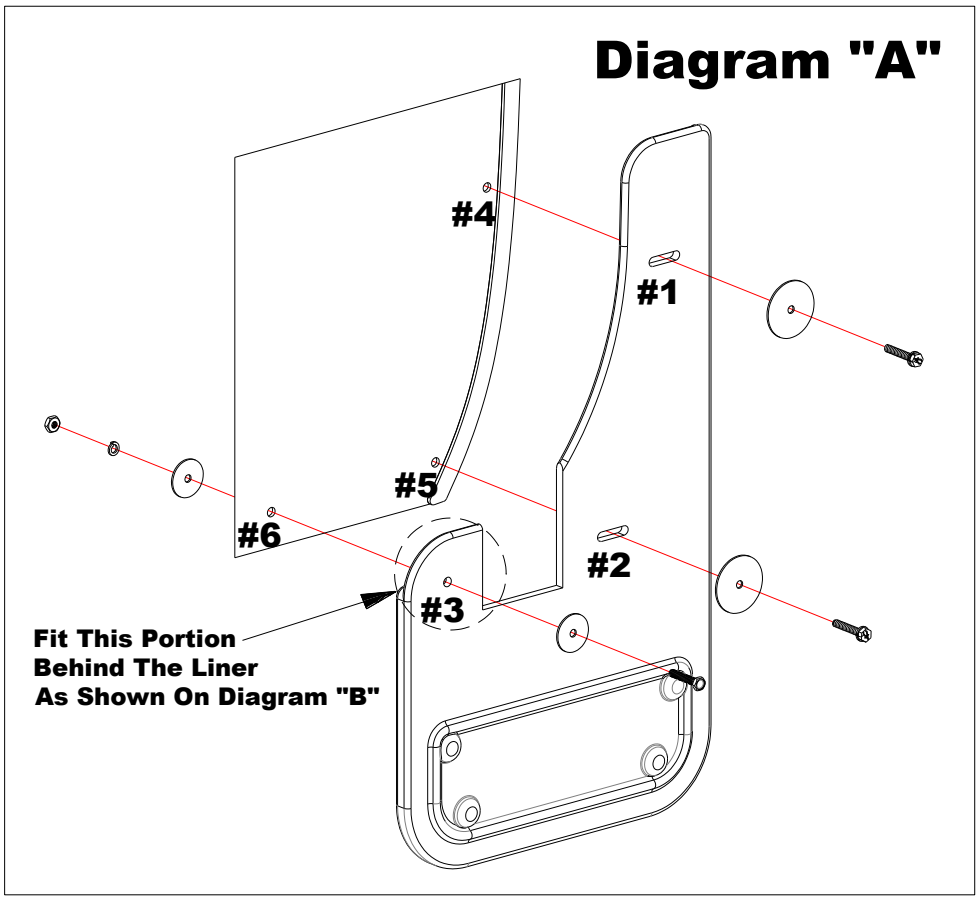

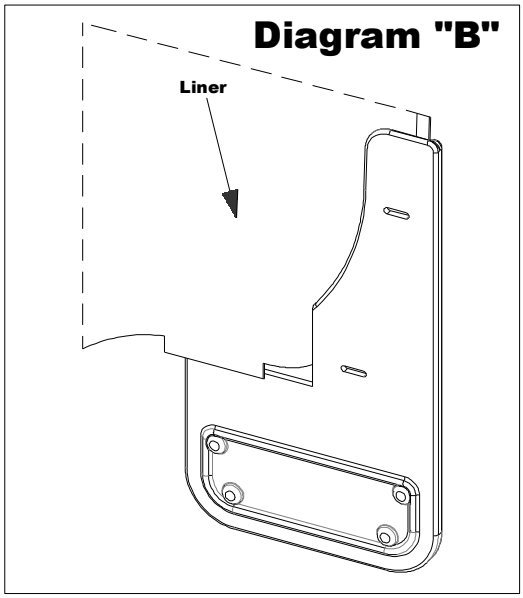

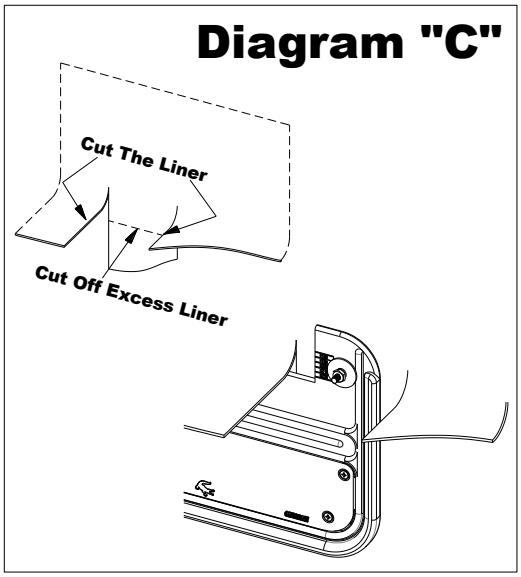

Please check out our YouTube channel to see an install video for this application.